Cherry Clough Consultants

# Good EMC Design Principles: cable routing

Keith Armstrong describes three important techniques for cable routing in metal cabinets, whether the cables are bundles of individual wires, or individual or bundled unshielded or shielded cables. Similar principles apply to systems and installations

EurIng Keith Armstrong C.Eng MIET

keith.armstrong@cherryclough.com

Originally published in PSB Magazine, March 2008, http://www.psbonthenet.net,
and reproduced here with their kind permission

This column describes three important EMC techniques for cable routing in metal cabinets, whether the cables are bundles of individual wires; or individual or bundled unshielded or shielded cables. Similar principles apply to systems and installations.

**Always route send and return conductors very close together**

Every DC or AC electrical power or signal, whether analogue, digital or radio-frequency (RF), *always* has a 'return' current that is equal to the 'send' current. The send and return currents *always* flow in a loop, from their sources to their loads and back again to their sources. To help achieve EMC this loop area should be as small as possible.

It has been common in the automotive, ship and aircraft industries to use the chassis of the vehicle as a common return path, but this is very bad practice indeed for EMC and causes great difficulties for electronics. So the chassis (metalwork) of a cabinet should never be used for anything other than the RF Reference as discussed in this column in the July 2007 issue of PSB.

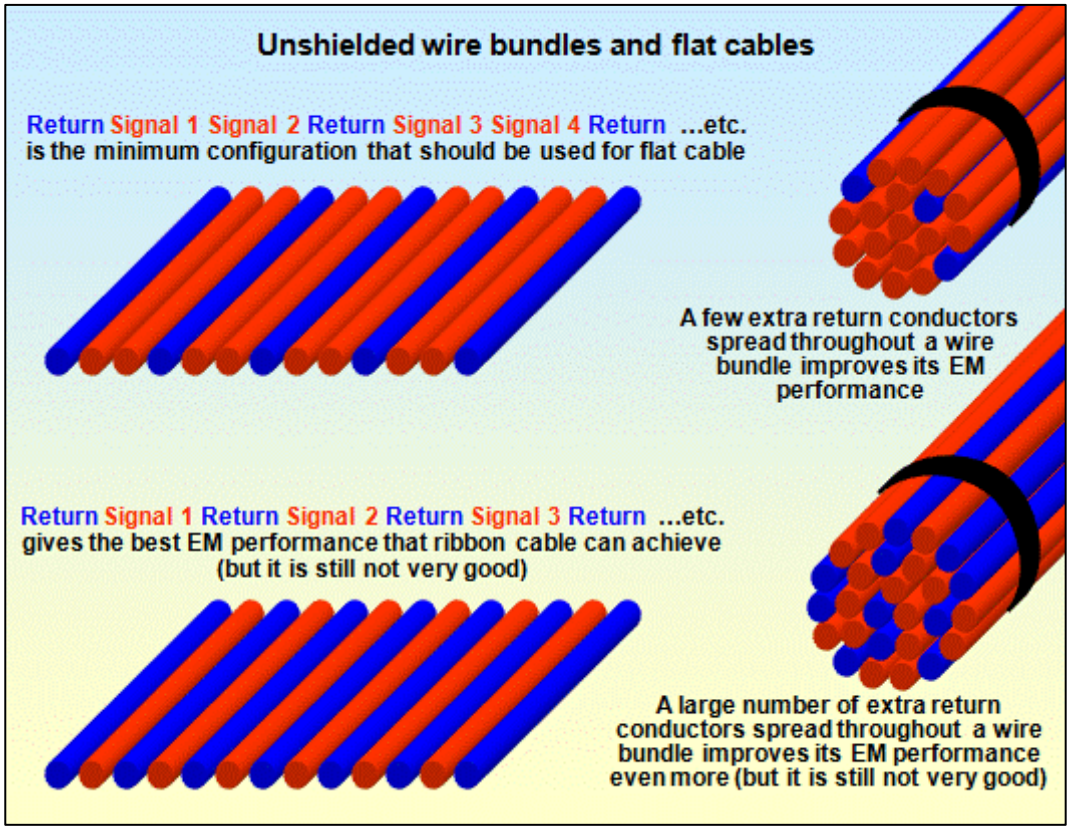


Ideally, the send and return conductors for any power or signal should be twisted together. This includes all the phase and neutral conductors of an AC mains supply, including their protective conductors (the returns for any mains filters, see the November 2007 issue of PSB). Where a mains conductor is switched (e.g. by a relay or contactor) its return should be routed nearby, to help keep loop areas small.

Typical mains cables have a slow twist that is perfectly adequate, but cables carrying high frequencies should have a twist pitch that is shorter than one-tenth of their shortest wavelength (i.e. < $30/f_{max}$ in metres, where $f_{max}$ is the highest frequency in MHz).

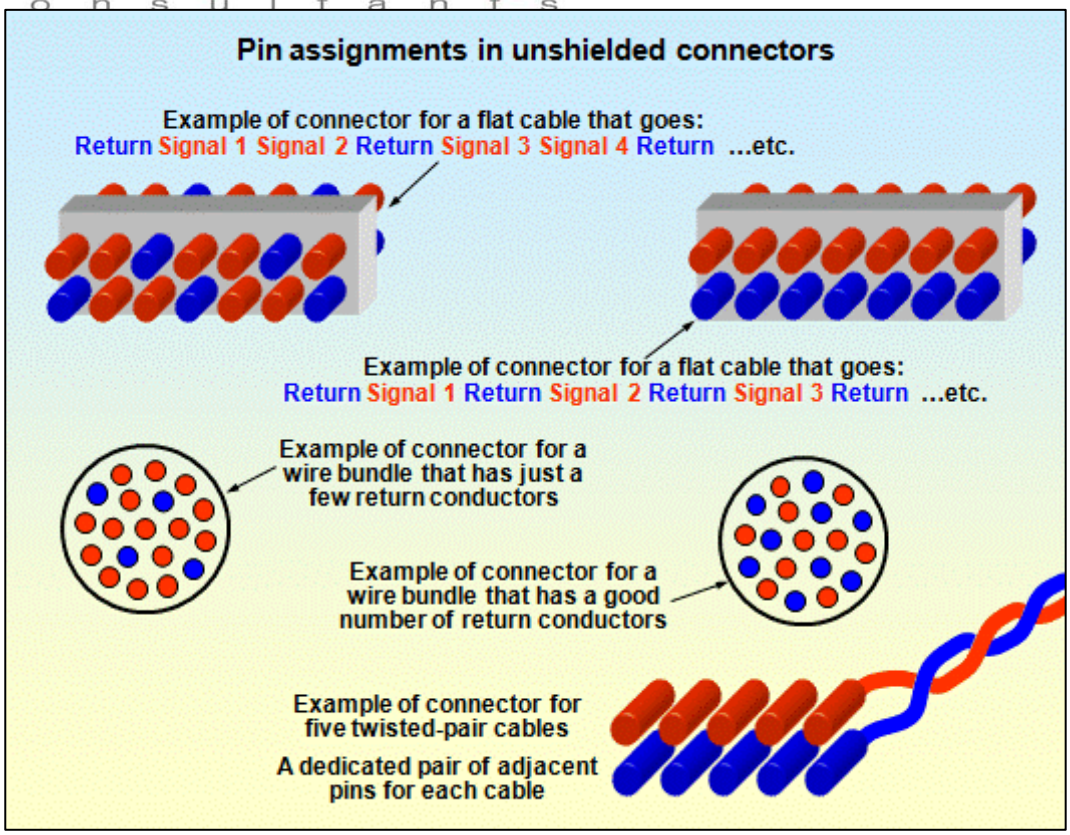


Where conductors cannot be twisted, the send and return conductors should be parallel and close to each other. In coaxial cables and the like this is automatic, but individual conductors should be in the same bundle – ideally twisted or tie-wrapped together before bundling. Busbar systems using bars spaced by thin sheets of insulation are better than busbars that use (much larger) air insulation between them.

Some equipment suppliers provide only one terminal for the common return for numerous signals. If this makes it impractical to provide a dedicated return for every individual send conductor, provide as many return conductors as possible, and bundle them along with the larger number of send conductors.

**Routing close to the RF Reference at all times**

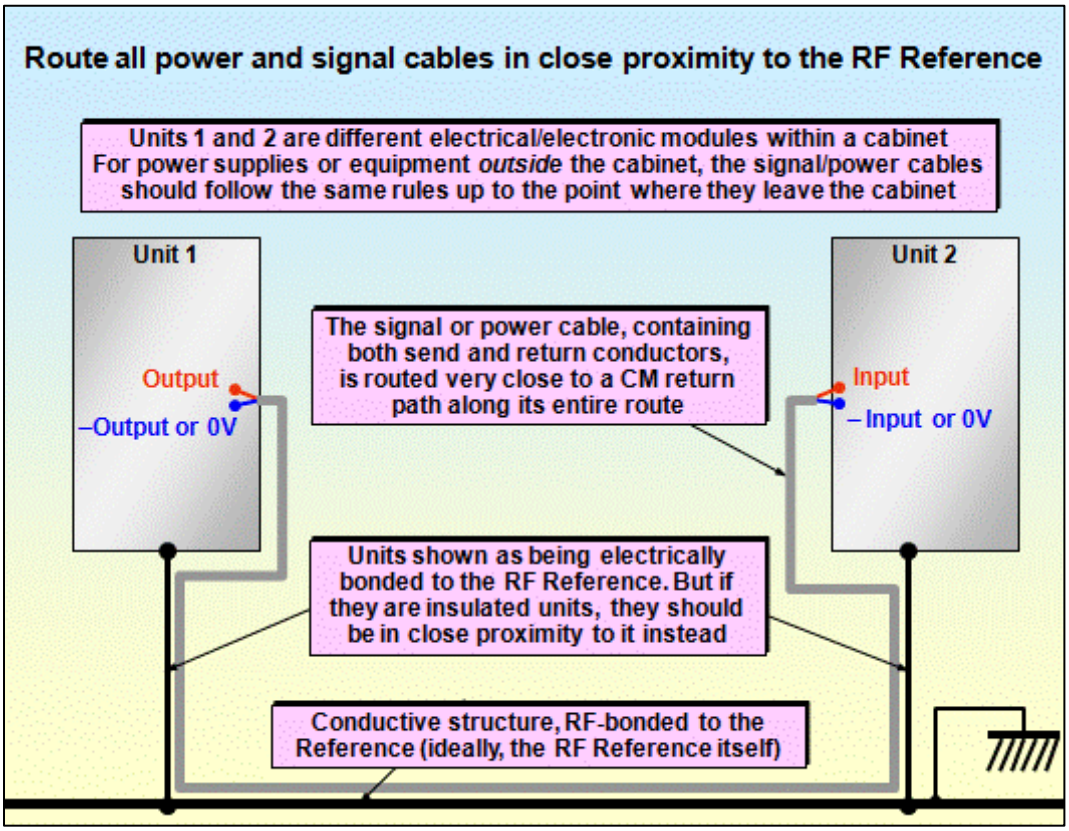

Even with small send/return loops there is some ‘leakage’ from them that we need to control to help achieve EMC, which we do by routing all conductors close to their RF Reference. The July 2007 issue of this column described how to use the chassis of a metal cabinet as an RF Reference, so all that is necessary is to make sure that all conductors are routed close to such metalwork at all times. Conductors should never fly through the air.

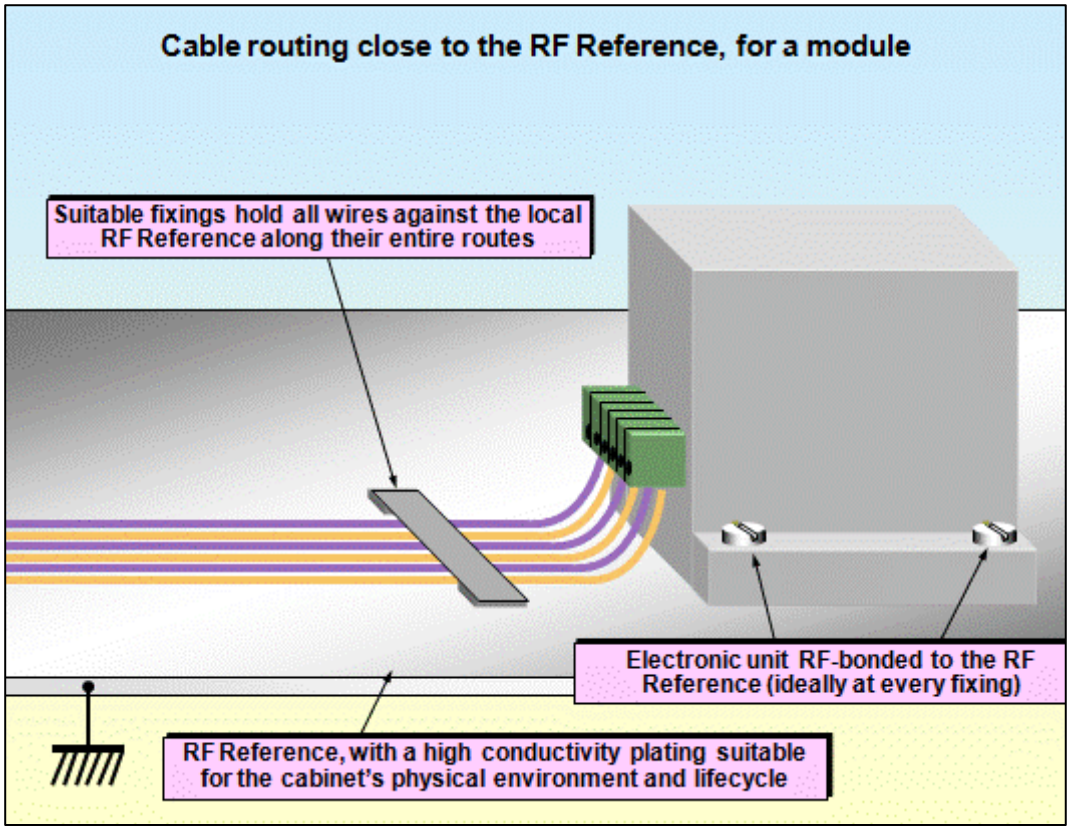


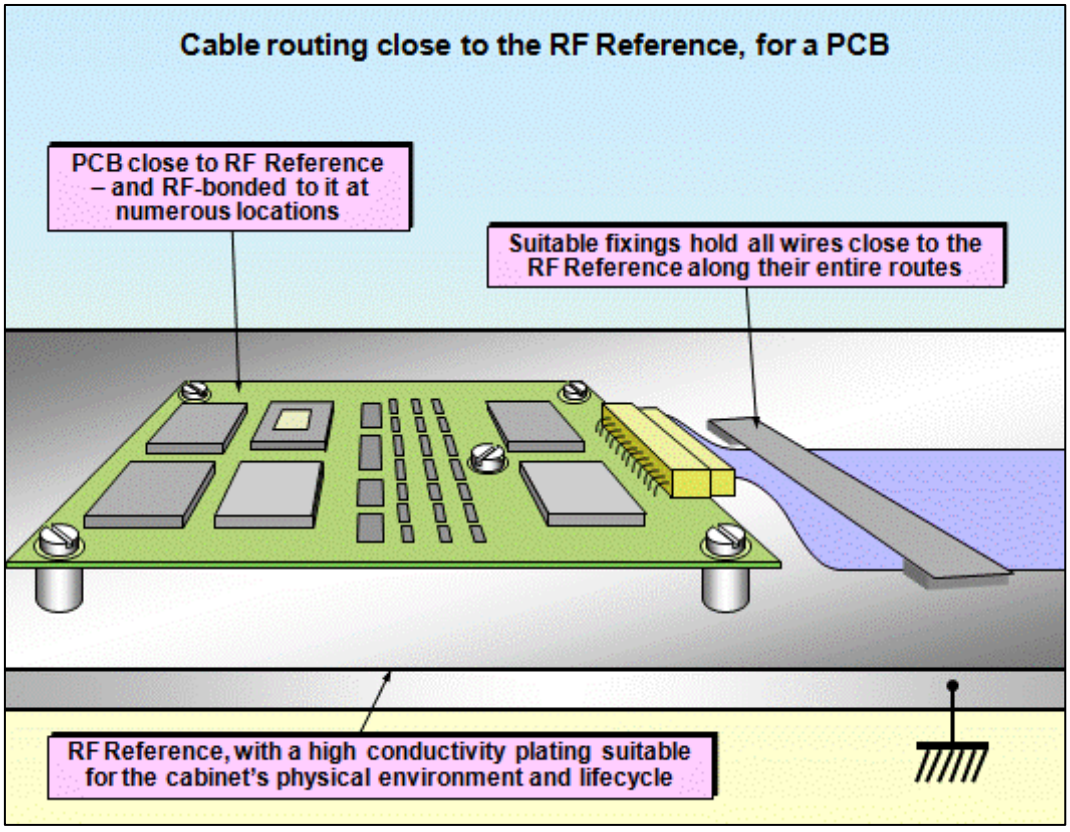

The RF Reference should be continuous along the route of every cable or bundle. Where there is a joint in the metal there should always be an electrical bond at the point where the cable/bundle crosses the joint. The bond should have a low impedance at $f_{max}$, which usually means direct metal-to-metal or a conductive gasket between highly conductive and corrosion-protected surfaces.

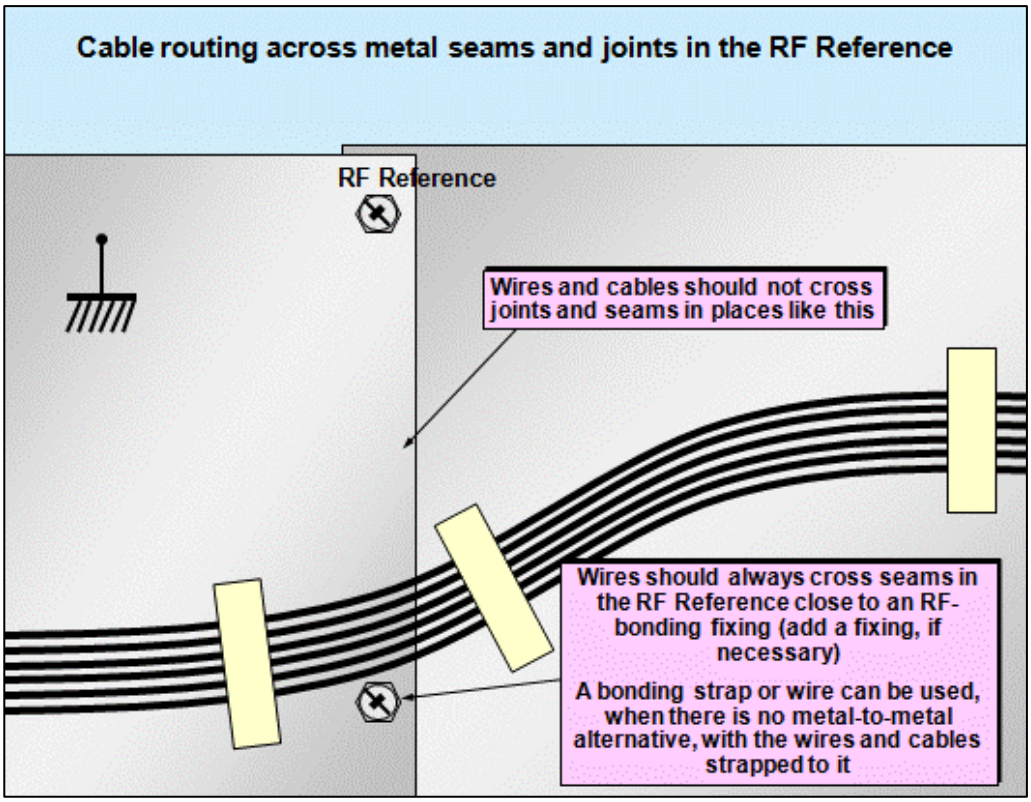


Where there is a gap in the RF Reference, for example when a cable/bundle crosses from a backplate to a cabinet wall, or crosses a door hinge, there should be at least a heavy-gauge wire (preferably a wide braid strap), bonding the different parts of the cabinet together at those places. The cable/bundle should ideally be strapped to the wire/braid.

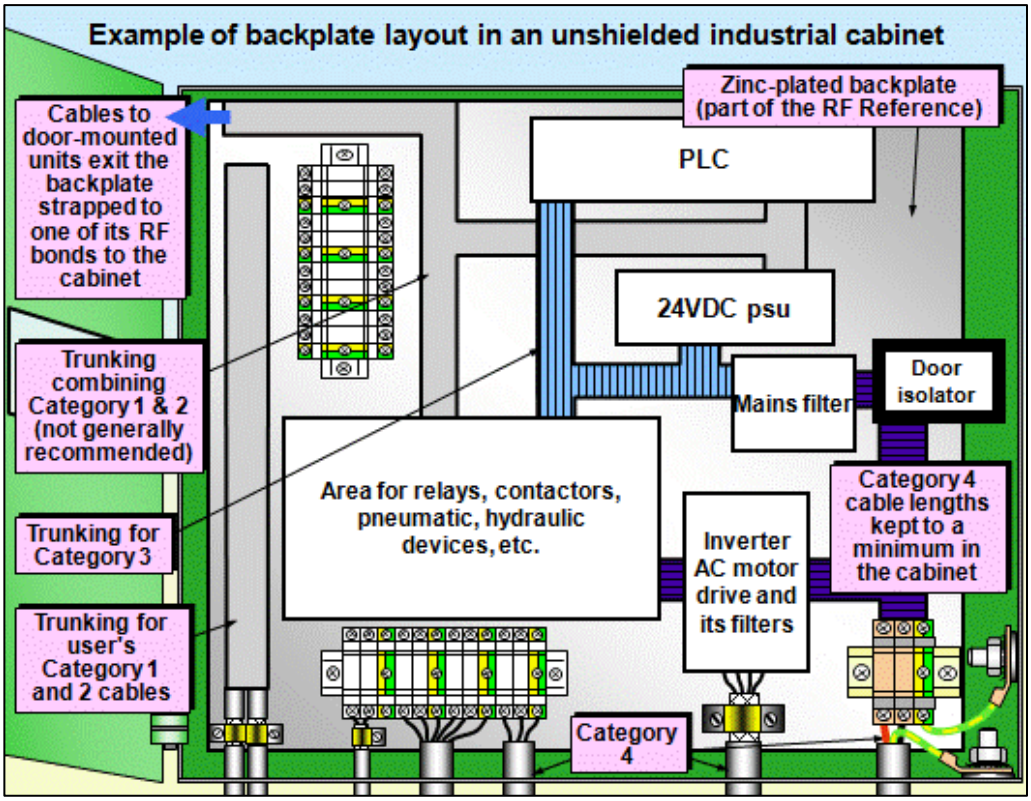

**Routing different kinds of cables separately**

Conductors should be split into five categories according to the signals and power they carry: sensitive analogue (1a), sensitive digital (1b), ordinary analogue/digital (2), not very interfering (3) and very interfering (4). This is for voltages up to 1kV AC rms, or 1.5kV DC – higher voltages use additional cable categories.

The categories should be routed separately from each other along their entire routes. The spacing between parallel runs of each category should be as large as possible, but it is hard to specify precise distances because it depends on the types and qualities of the cables, how well the other two routing issues discussed above have been realised, and the designs of the electronic circuits in the equipment connected to the cables.

As a very crude guideline, it is best to ensure at least 100mm between the routes taken by each category of cable (but only 20mm between 1a and 1b), when each category is routed close to the RF Reference and when all of their send and return conductors are close together, along their entire route. Improving the shielding or filtering of the cables can allow closer spacing.

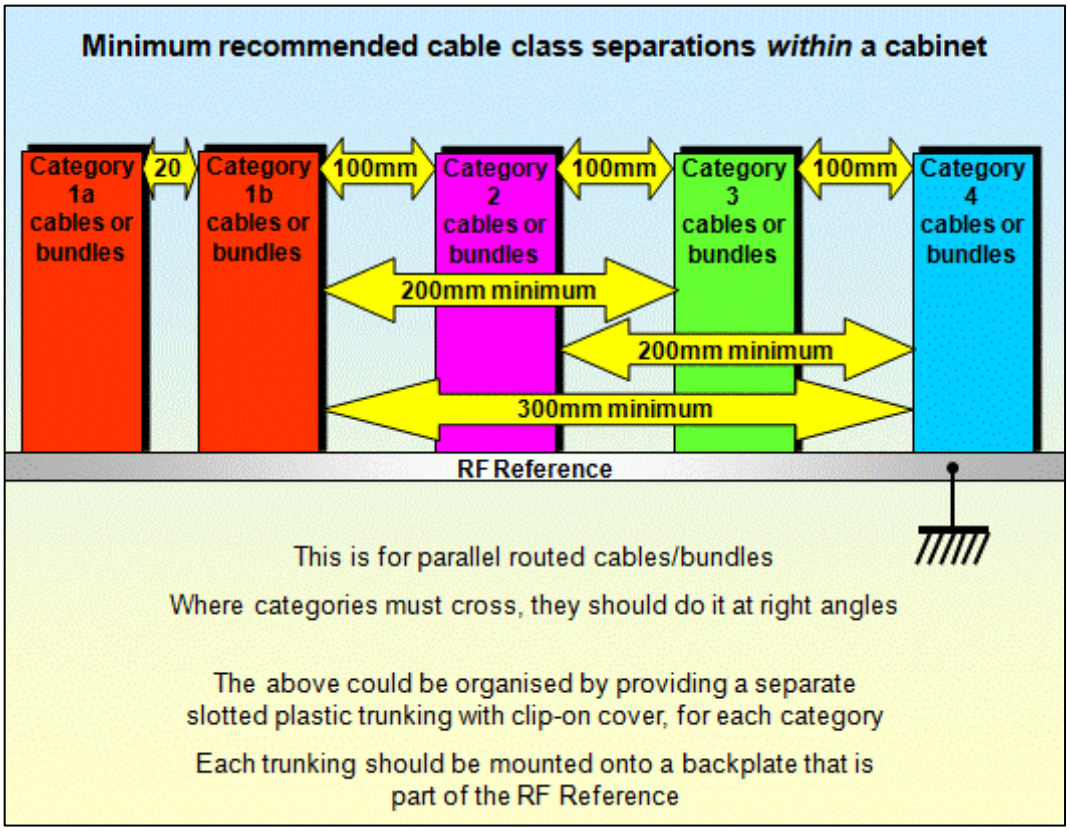


For more details on the issues mentioned here, read: "*Good EMC Engineering Practices in the Design and Construction of Industrial Cabinets*", from http://www.reo.co.uk/knowledgebase' (click on "*Good EMC Engineering Practices for Panel Builders*").

These routing techniques are also described in more detail in: "*EMC for Systems and Installations*" (Newnes, 2000, ISBN 0-7506-4167-3, www.bh.com/newnes, RS Components P/No. 377-6463).

For those who wish to investigate further, the Directives and Regulations, and their official guides, plus a great deal of useful and practical information, are available as described in the document: '*Some Useful References on EMI and EMC',* posted on this site.